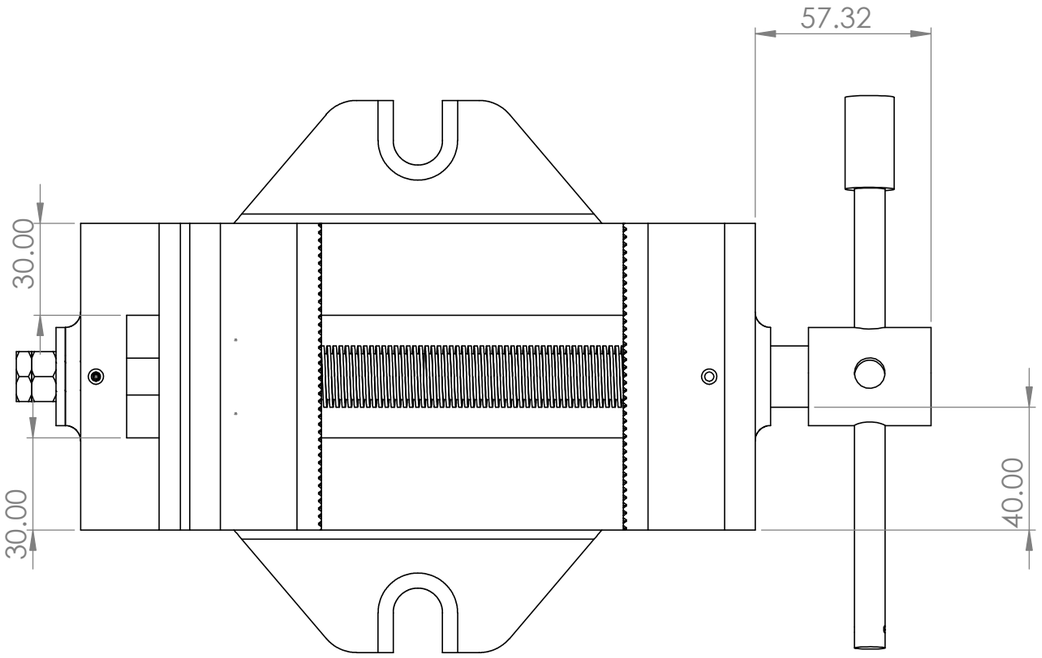

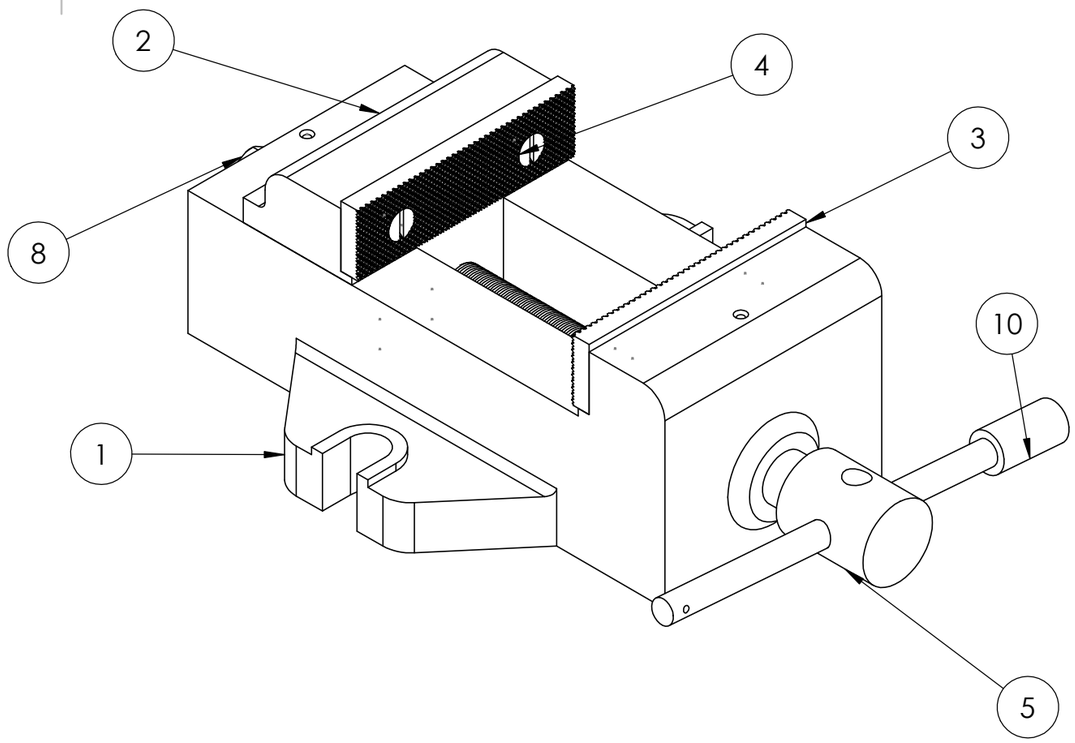

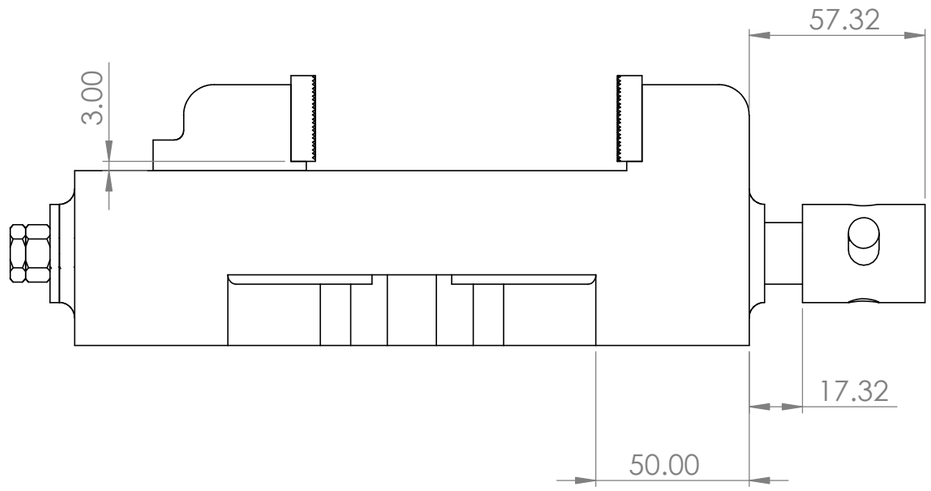

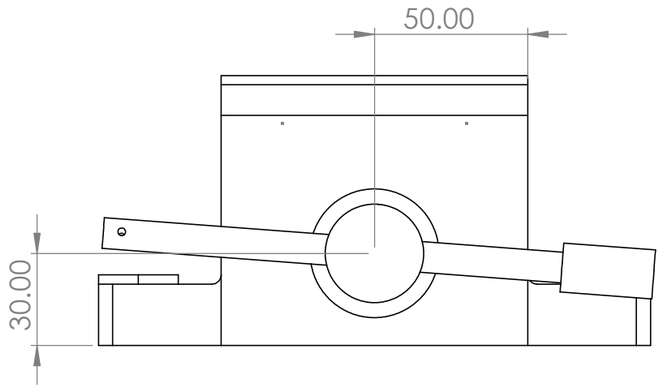

ITEM NO.	PART NUMBER	QTY.
1	body	1
2	movable jaw	1
3	jaw grip	2
4	screw m6	6
5	screw rod	1
6	washer	1
7	nut m10	1
8	lock nut m10	1
9	clamping plate	1
10	handle	1

UNLESS OTHERWISE SPECIFIED:
DIMENSIONS ARE IN MILLIMETERS
SURFACE FINISH:
TOLERANCES:
LINEAR:
ANGULAR:

FINISH:

DEBURR AND BREAK SHARP EDGES

DO NOT SCALE DRAWING

REVISION

	NAME	SIGNATURE	DATE
DRAWN			
CHK'D			
APPV'D			
MFG			
Q.A			

MATERIAL:

WEIGHT:

TITLE:

DWG NO.

A3

machine vice assembly

SCALE:1:5

SHEET 1 OF 2

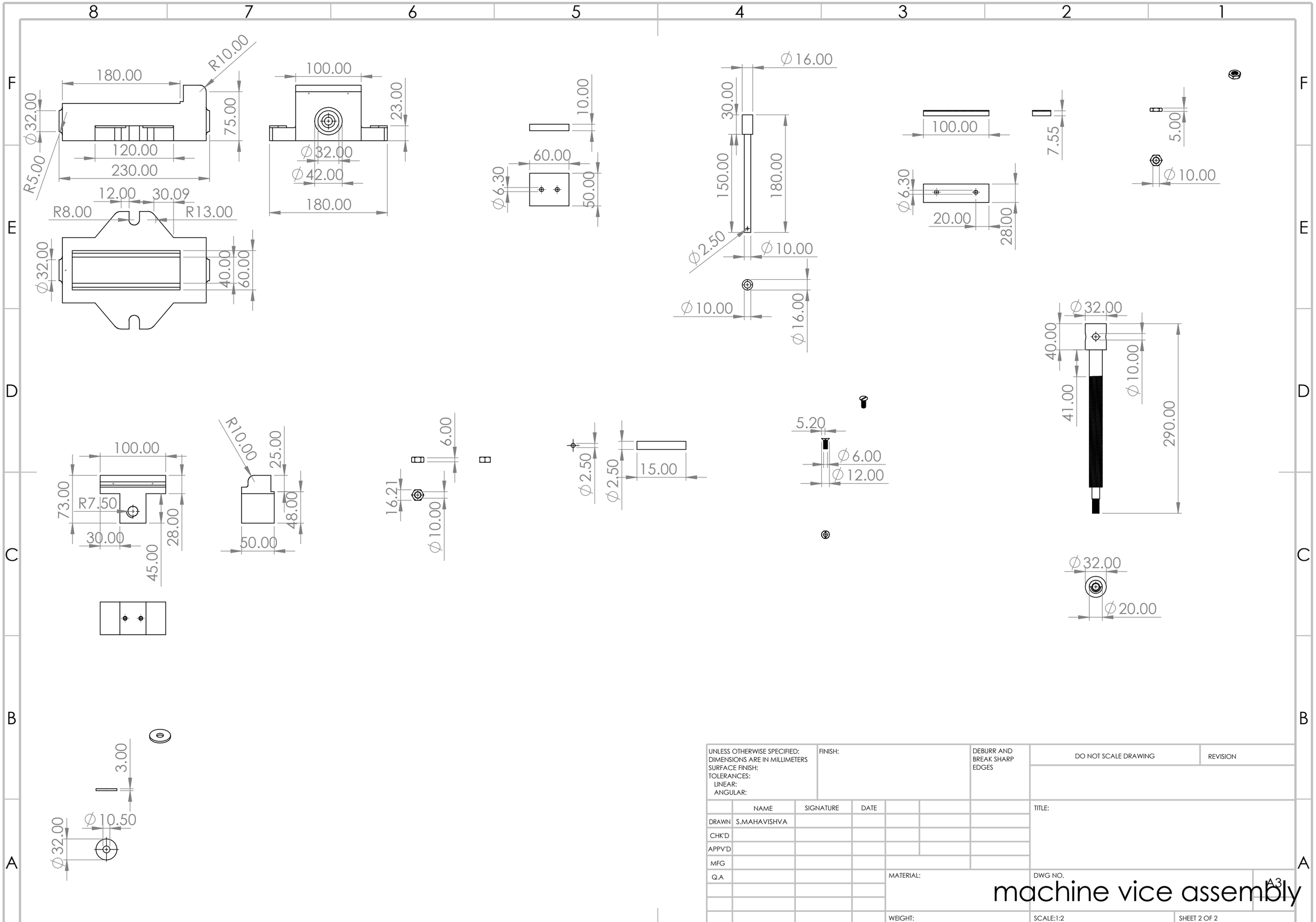

UNLESS OTHERWISE SPECIFIED: DIMENSIONS ARE IN MILLIMETERS SURFACE FINISH: TOLERANCES: LINEAR: ANGULAR:	FINISH:			DEBURR AND BREAK SHARP EDGES	DO NOT SCALE DRAWING	REVISION
	NAME	SIGNATURE	DATE		TITLE:	
DRAWN	S.MAHAVISHVA					
CHK'D						
APPV'D						
MFG						
Q.A				MATERIAL:	DWG NO.	A3
					machine vice assembly	
				WEIGHT:	SCALE:1:2	SHEET 2 OF 2